

G80 U.S. Clevis Self-Locking Hook (TCSH009)

- Powder coated, different color is available as per request.
- Working load limit permanently shown on the body.
- Max proof load is 2.5 times of the working load limited.
- Min. Breaking strength is 4 times of the W.L.L.

Size	W.L.L (lbs)	B.L (lbs)	Dimension (mm)						N.W. (kg/pc)
			A	E	Φ	H	K	L	
8-8	4500	18000	9.5	35	42	29.5	161.5	163.5	0.96
10-8	7100	28400	12	46	55	34.5	145	206	1.60
13-8	12000	48000	15	56	64	41.5	173	247	3.65

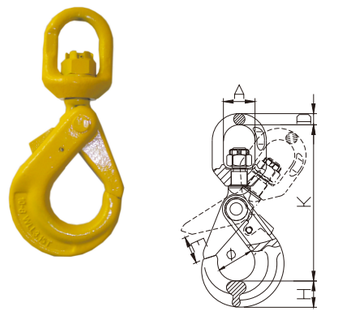

G80 U.S. Type Swivel Self-Locking Hook (TCSH010)

- Powder coated, different color is available as per request.
- Working load limit permanently shown on the body.
- Max proof load is 2.5 times of the working load limited.
- Min. Breaking strength is 4 times of the W.L.L.

Size	W.L.L (lbs)	B.L (lbs)	Dimension (mm)						N.W. (kg/pc)
			A	E	Φ	H	K	E	
8-8	4500	18000	35.5	12.5	42	29.5	177	32	1.9
10-8	7100	28400	42	15	55	34.5	211.5	46	3.08
13-8	12000	48000	50	18	64	41.5	253.5	56	4.49

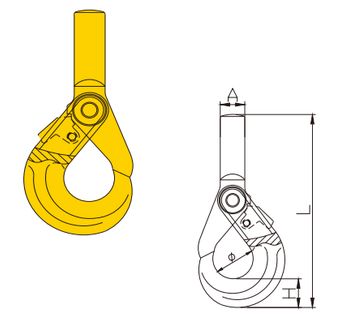

G80 U.S. Shank Self-Locking Hook (TCSH011)

- Powder coated, different color is available as per request.
- Working load limit permanently shown on the body.
- Max proof load is 2.5 times of the working load limited.
- Min. Breaking strength is 4 times of the W.L.L.

Size	W.L.L (lbs)	B.L (lbs)	Dimension (mm)				N.W. (kg/pc)
			A	L	Φ	H	
5/16-8	4500	18000	25.4	199	42	29.5	1.27
3/8-8	7100	28400	29	243	55	34.5	2.00

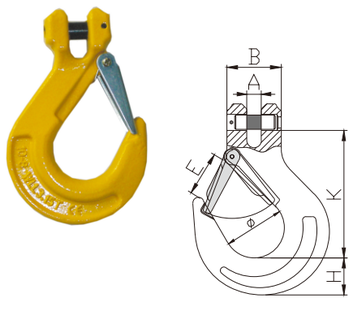

G80 Clevis Sling Hook With Latch(TCSH012)

- Powder coated, different color is available as per request.
- Working load limit permanently shown on the body.
- Max proof load is 2.5 times of the working load limited.
- Min. Breaking strength is 4 times of the W.L.L.

Size	W.L.L (t)	B.L (t)	Dimension (mm)						N.W. (kg/pc)
			A	B	Φ	H	K	E	
6-8	1.12	4.48	8	32	35	23	76	26	0.32
7/8-8	2.0	8.0	9.5	37	37	32.5	85.5	29	0.52
10-8	3.15	12.8	13	49	46	35	104	39	1.05
13-8	5.3	21.2	16.5	56.5	56	42.5	128	47	2
16-8	8	32	221.5	70.5	60	54	150	55	3.7
20-8	12.5	50	24	77	79	58	180	61	6
22-8	15	60	27	91	101	62	213	72	10.4

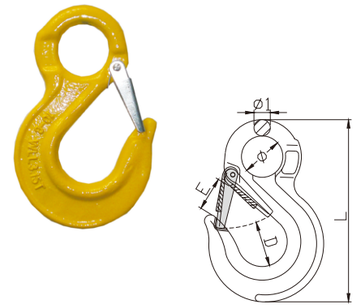

G80 EYE Sling Hook with Latch (TCSH013)

- Powder coated, different color is available as per request.
- Working load limit permanently shown on the body.
- Max proof load is 2.5 times of the working load limited.
- Min. Breaking strength is 4 times of the W.L.L.

Size	W.L.L (t)	B.L (t)	Dimension (mm)					N.W. (kg/pc)
			Φ1	E	D	Φ	L	
6-8	1.12	4.48	9	24	21	20	108	0.3
7/8-8	2.0	8.0	11	30	56	25	133	0.4
10-8	3.15	12.6	15	34	39	38	167	0.9
13-8	5.3	21.2	19	39	54	43	213	1.7
16-8	8	32	23	46	64	50	255	3.2
20-8	12.5	50	24	40	80	62	305	5.8
22-8	15	60	32	71	80	62	348	8.5
26-8	21.2	84.8	35	81	82	64	394	13
32-8	31.5	126	37	102	112	88	480	17

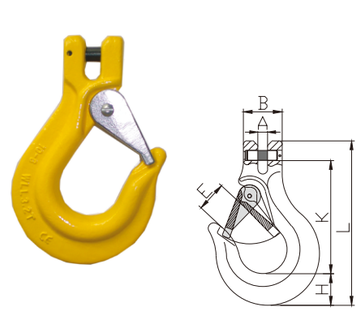

G80 Clevis Sling Hook with Cast Latch (TCSH014)

- Powder coated, different color is available as per request.
- Working load limit permanently shown on the body.
- Max proof load is 2.5 times of the working load limited.
- Min. Breaking strength is 4 times of the W.L.L.

Size	W.L.L (t)	B.L (t)	Dimension (mm)						N.W. (kg/pc)
			A	E	B	H	K	L	
6/7-8	1.6	6.4	8	24	36	28	100	144	0.58
7-8	1.6	6.4	8.5	28	37.5	32	105	153	0.72
8-8	2	8	10	30	42	32.5	117	168	0.91
10-8	3.2	12.8	12	32	50	41	128	191.5	1.42
13-8	6	24	15	40	60	49	177	254.5	3.3

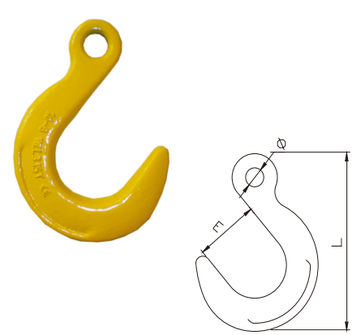

G80 Eye Foundry Hook (TCSH015)

- Powder coated, different color is available as per request.
- Working load limit permanently shown on the body.
- Max proof load is 2.5 times of the working load limited.
- Min. Breaking strength is 4 times of the W.L.L.

Size	W.L.L (t)	B.L (t)	Dimension (mm)			N.W. (kg/pc)
			E	Φ	L	
6-8	1.6	6.4	63.5	18	163	1.09
8-8	2	8	63.5	18	163	1.09
10-8	3.2	12.8	76	22	200	2.03
13-8	5.4	21.6	89	27	238	3.22
16-8	8.2	32.8	102	32	278	5.26
20-8	12.8	51.2	114.5	38	325	9.1
22-8	15.5	62	127.5	45	361	11.3
26-8	21.5	86.4	140	66.5	402	16.8
32-8	32.8	131.2	153.5	81.5	461	26.6

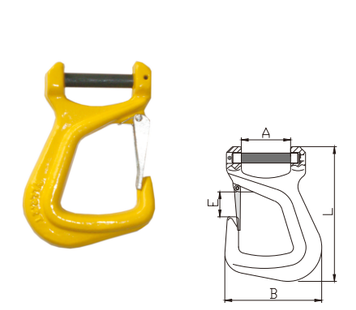

G80 Clevis Belt Hook (TCSH016)

- Powder coated, different color is available as per request.
- Working load limit permanently shown on the body.
- Max proof load is 2.5 times of the working load limited.
- Min. Breaking strength is 4 times of the W.L.L.

Size	W.L.L (t)	B.L (t)	Dimension (mm)				N.W. (kg/pc)
			A	B	E	L	
2.2T	2..2	8.8	61	120	47	167	1.47